Indexator / GV 12.2

KEY FEATURES

- *Endless rotation*
- *High torque*
- *Optimized positioning performance*
- *Hose protection included*

A	80,5
B	Ø35
C	Ø173
D	Ø17
F	30
H	317
K	38,5
L	Ø209
M	404

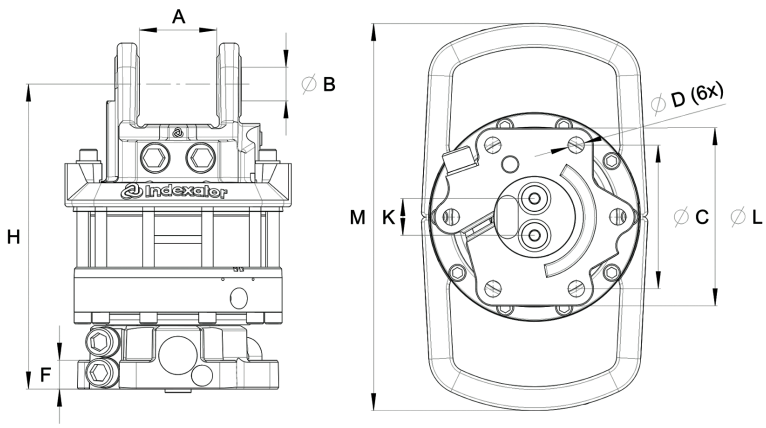

MODEL SPECIFICATIONS

	Kg	ton	Bar	l/min				tm	tm
GV 12.2	56,9	10	250	25	360°	2200	1/2"	12	25

INTERMERCATO®

High performance lift and load attachments for Forestry, Transport, Construction and Recycling.

www.intermercato.com | info@intermercato.com | Tel +46 (0)414 20525 | SE-272 93 Tommarp, Sweden