INTERMERCATO®
HIGH PERFORMANCE LIFT & LOAD ATTACHMENTS

# Worm Drive 9 3/8"

**SPECIAL NON-SELF LOCKING WORM DRIVE ROTATORS FOR INCREASED ROTATION SPEED**

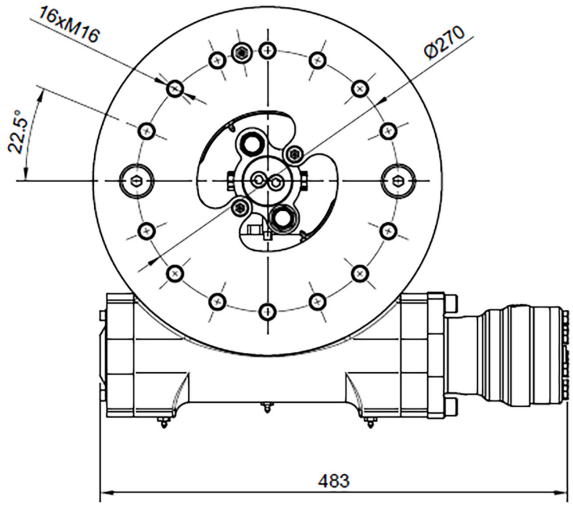

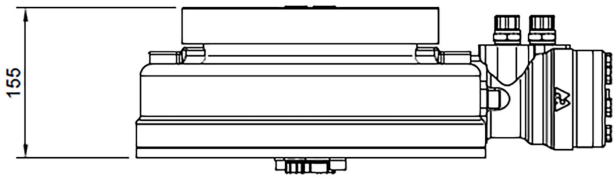


### KEY FEATURES

- *Low built*
- *High torque*
- *Exact positioning*
- *High axial and radial load capacity*

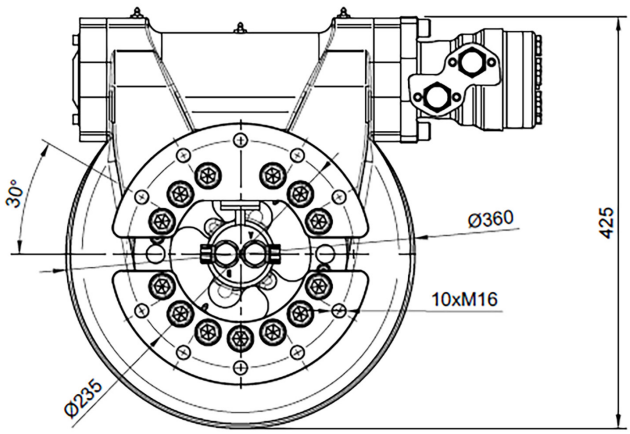


| MODEL SPECIFICATIONS | Kg | ton | ton | Bar | Bar | l/min | l/min | Nm | ROTATION SPEED | | | ton |
|---|---|---|---|---|---|---|---|---|---|---|---|---|
| **WDR 9 3/8"** | 72 | 9 | 3,5 | 250 | 120 | 45 | 20 | 2400 | 4,6 rpm | G 3/8" | G 1/2" | 5-8 |



www.intermercato.com | info@intermercato.com | Tel +46 (0)414 20525 | SE-272 93 Tommarp, Sweden